SIXTRAK®

4-20 mA Analog Output Module

Select 4-20 mA analog outputs when…

…your actuators or instruments require current loop signals.

- High precision ensures accurate transfer of data
- High resolution removes “steps” from the outputs
- Outputs are group isolated to protect the module and eliminate ground loops
- Operates from a wide range of loop power supplies

Performance Specifications

Number of channels	4 or 8
Output range	4-20 mA
D/A resolution	13 bits
Output resolution	2 µA
Full scale accuracy (@ 20°C)	+/- .05%
Output linearity (@ 20°C)	+/- .02%
Output span adjustment	+/- 25%
Output offset adjustment	+/- 25%
Span temperature coefficient	+/- 50 ppm per °C
Offset temperature coefficient	+/- 50 ppm per °C
Maximum output settling time (to 0.05%)	5 mS
User loop voltage	10-30 Volts
Load resistance (@ +24 volt supply)	0-750 Ohms
Maximum ST-Bus power	500 mW
Isolation (from ST-Bus)	1200 VDC
Operating temperature range	-30 to 70°C
Storage temperature range	-40 to 85°C
Humidity (non-condensing)	5 to 95%

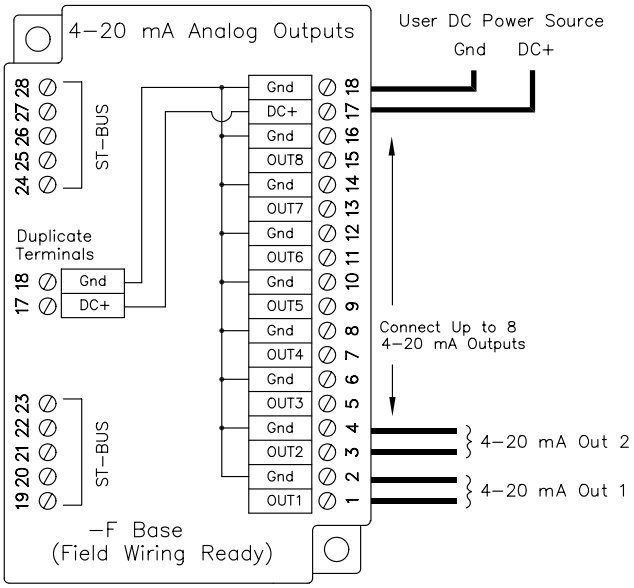

Equivalent Circuit

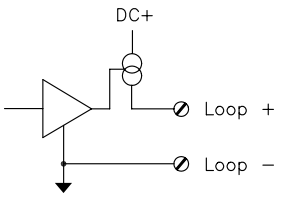

Ordering Information

Description	Module w/Base	Module Only
4 Current Outputs	ST-AO-20M-04F	ST-AO-20M-04M
8 Current Outputs	ST-AO-20M-08F	ST-AO-20M-08M

SIXNET, 331 Ushers Rd. Ballston Lake, NY 12065 USA • +1 (518) 877-5173 • FAX +1 (518) 877-8346 • sales@sixnet.com

Select voltage analog outputs when…

…the inputs on your peripheral devices expect a voltage signal.

- Software selectable output ranges: 0-5, 0-10, +/- 5 and +/- 10 Volts
- High resolution removes “steps” from the outputs
- Outputs are group isolated to protect the module and eliminate ground loops
- No external power supply required. (Outputs are powered by module)

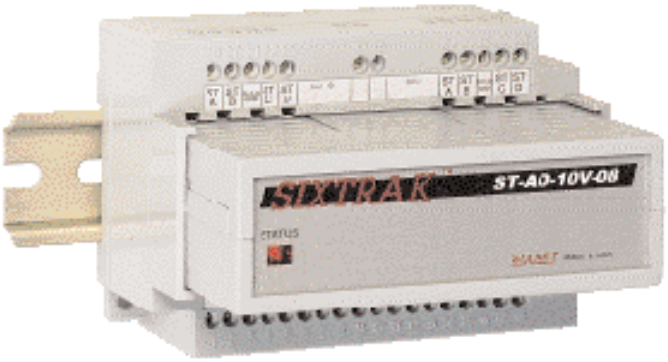

Performance Specifications

Number of channels	8
Output ranges	+/- 5, +/- 10, 0-5, 0-10 Volts
D/A resolution	14 bits
Output resolution	1.5 mV
Full scale accuracy (@ 20°C)	+/- .05%
Output span adjustment	+/- 25%
Output offset adjustment	+/- 25%
Span temperature coefficient	+/- 50 ppm per °C
Offset temperature coefficient	+/- 50 ppm per °C
Maximum output settling time (to 0.05%)	5 mS
Maximum output current (from each output)	5 mA
Maximum ST-Bus power	2200 mW
Isolation (from ST-Bus)	1200 VDC
Operating temperature range	-30 to 70°C
Storage temperature range	-40 to 85°C
Humidity (non-condensing)	5 to 95%

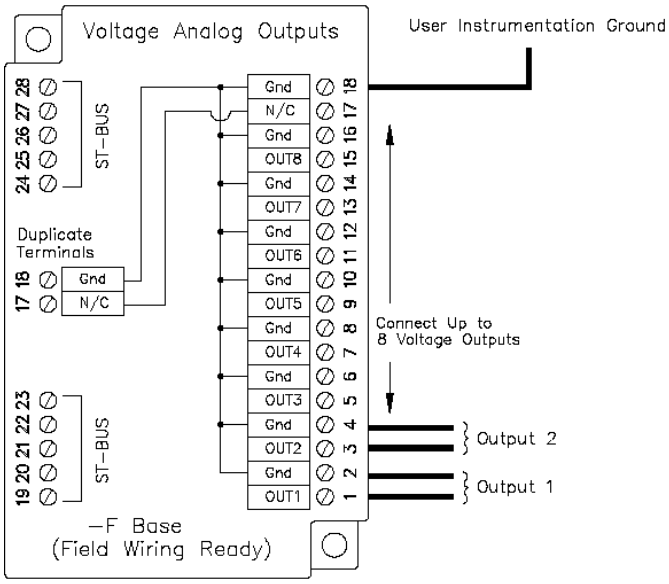

Equivalent Circuit

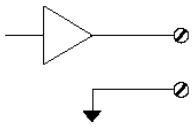

Ordering Information

Description	Part Number
8 Voltage Outputs w/Wiring Base	ST-AO-10V-08F
Module only	ST-AO-10V-08M

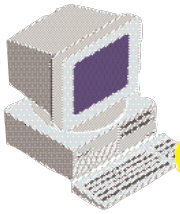

Visit our web site for the latest details!
www.sixnet.com

SIXNET, 331 Ushers Rd., Ballston Lake NY 12019 USA • +1 (518) 877-5173 • FAX +1 (518) 877-8346 • sales@sixnet.com